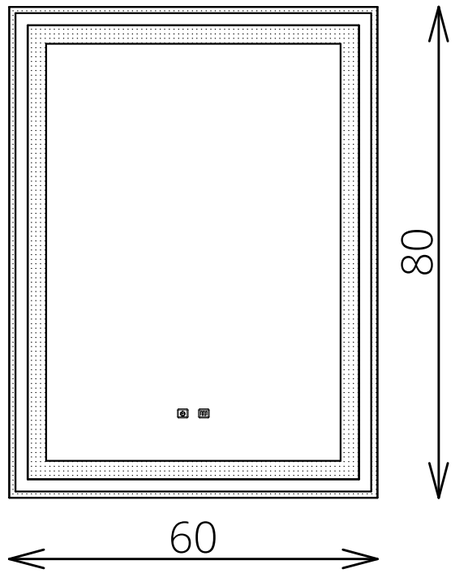
80
60

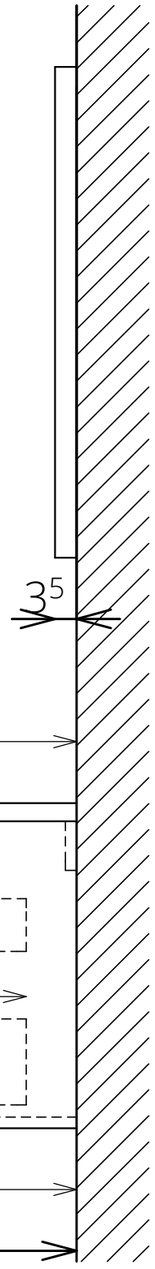
3.5
46
8.6
35
14
1.8
43.2
45

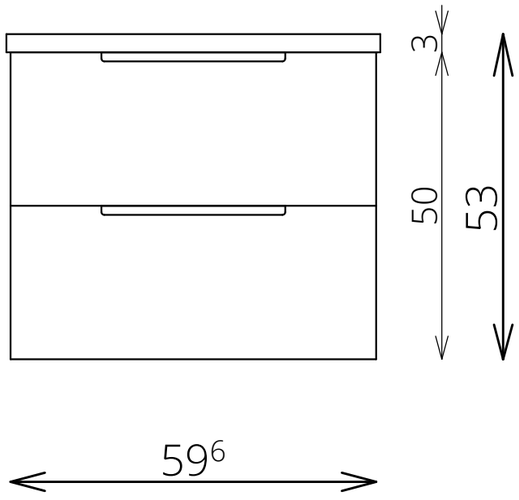
61
3
50
53
59.6