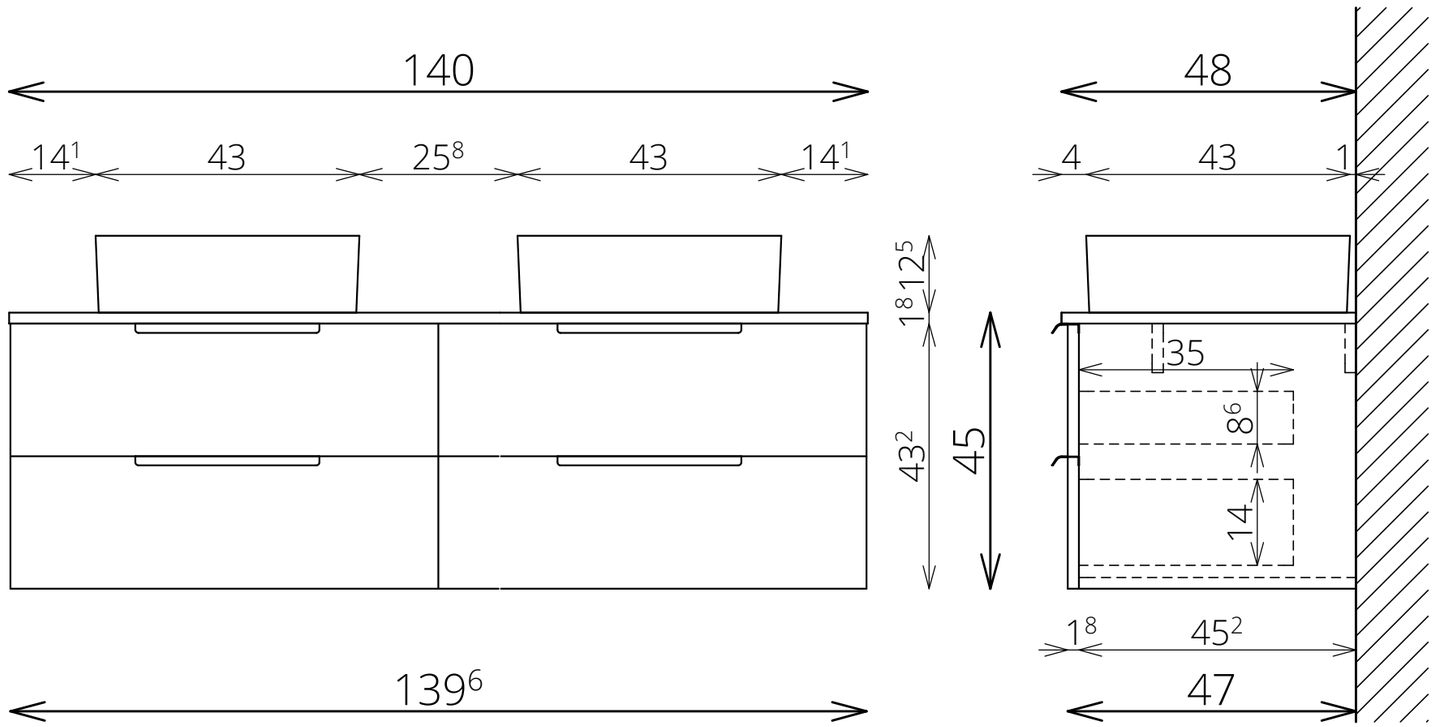
140
14¹
43
25⁸
43
14¹
139⁶
1⁸
12⁵
43²
45
48
4
43
1
35
8⁶
14
1⁸
45²
47