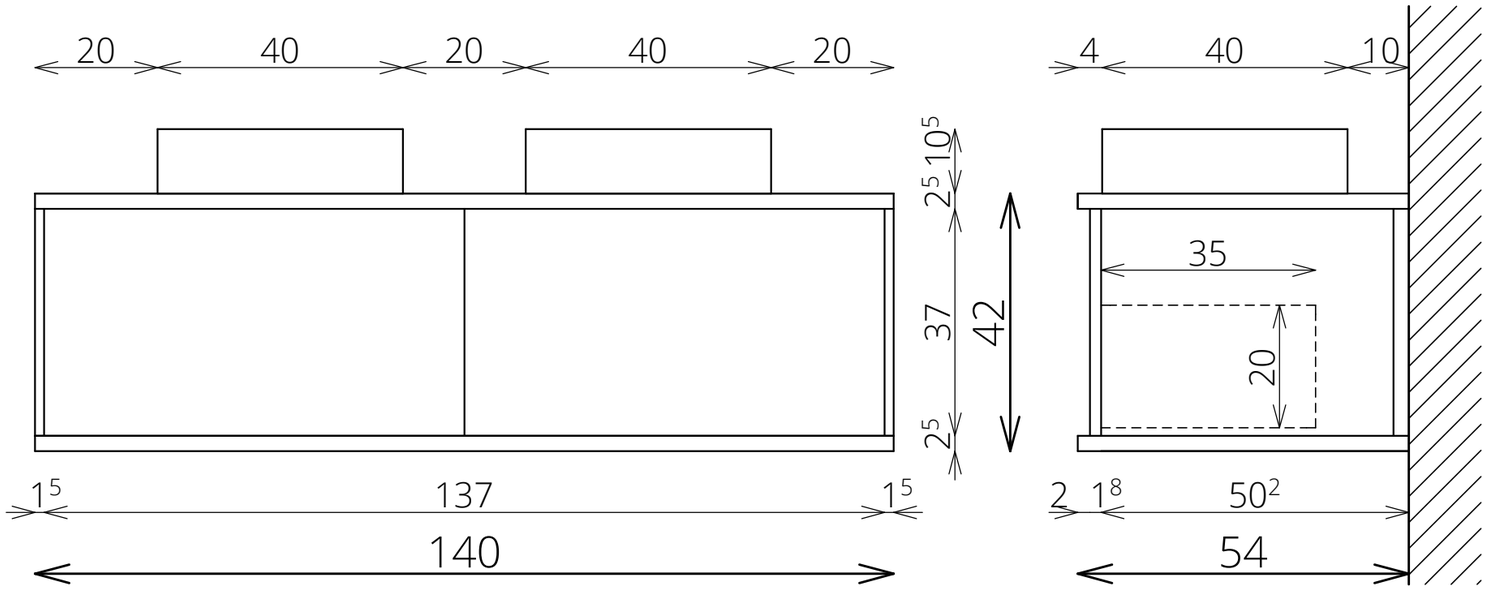
20
40
20
40
20
4
40
10
10.5
2.5
37
42
2.5
35
20
1.5
137
1.5
140
2
1.8
50.2
54