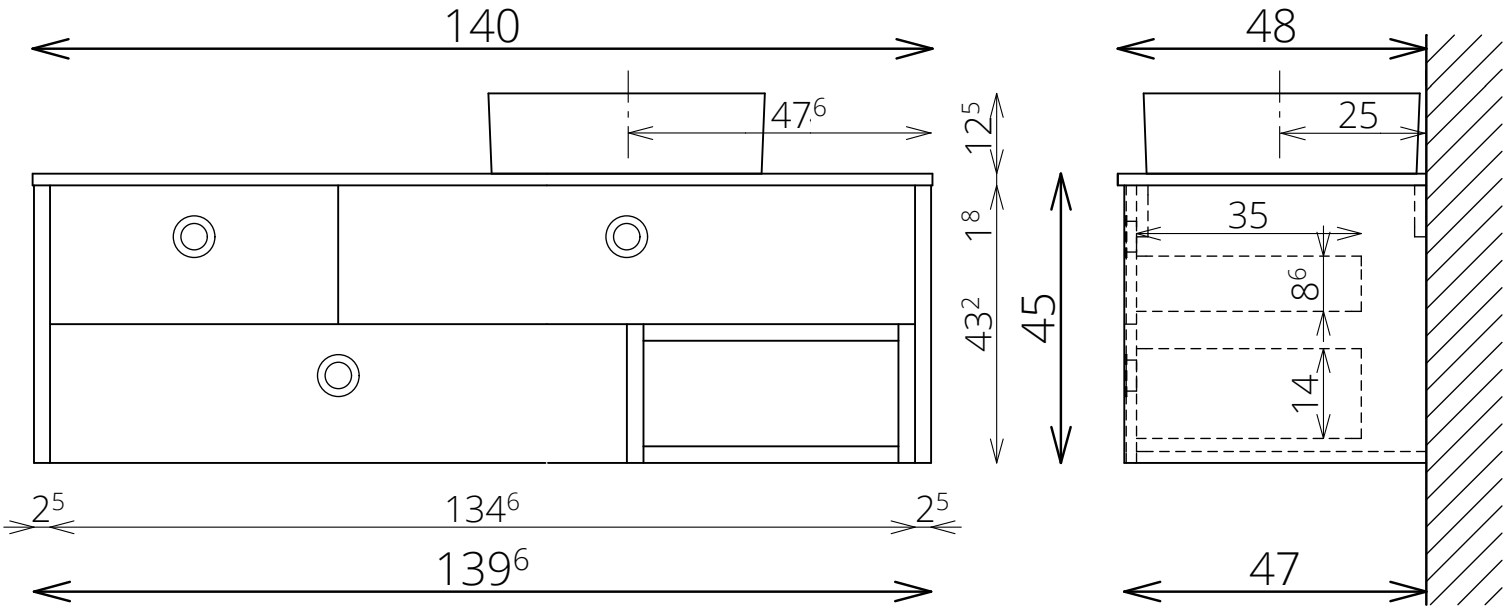
140
47.6
12.5
1.8
43.2
45
2.5
134.6
2.5
139.6
48
25
35
8.6
14
47